DM11S parts list

John Macdonald Group HYDRAULICS COUPLINGS AIRTOOLS

STANDARD DEMOTOOLS

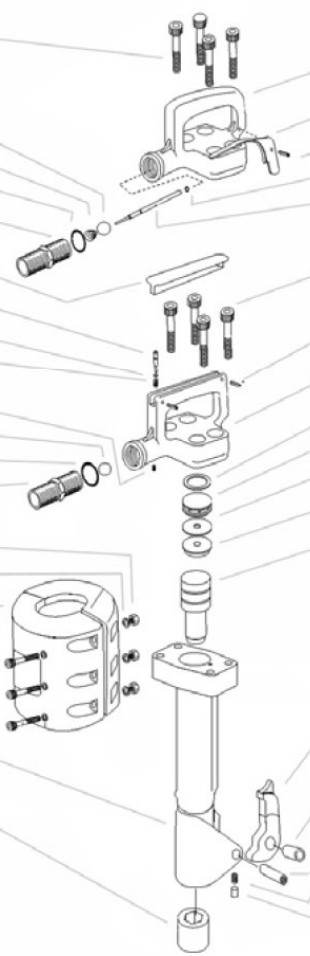

[4] Capscrew 162011-	5	
[1] Throttle Valve Ball 023014-	8	
[1] Throttle Valve Spring 030012-	32	
[1] Seal 162020-	33	
[1] Nipple Connection 901081-	9	
[1] Throttle Lever 162073-	1	
[1] Throttle Valve Pin 162009-	2	
[1] Throttle Valve Stem Seal 162090-	3	
[1] Throttle Sring 162010-	4	
[1] Kickport Screw 162014-	26	
[1] Throttle Valve Ball 023014-	8	
[1] Seal 162020-	33	
[1] Nipple Connection 901081-	9	
[3] Locknut 029009-	19	
[6] Washer 029013-	17	
[1] Silencer(2halves) 162012 -	16	
[3] Silencer Screw 910101-	18	
[1] Cylinder 162049-	15	
[1] Chuck Bushing 153002-	25	
	27	-162030 Handle [1]
	30	-301002 Throttle Lever [1]
	31	-162032 Throttle Lever Pin [1]
	29	-005005 Throttle Valve Pin Seal [1]
	28	-062031 Throttle Valve Pin [1]
	5	-162011 Capscrew [4]
	6	-162008 Spirol Pin [2]
	7	-162001 Handle [1]
	10	-153022 Preload Pad [1]
	11	-162035 Valve Block [1]
	12	-167004 Valve [1]
	13	-162036 Valve Seat [1]
	14	-156008 Piston [1]
	20	-162003 Latch Retainer [1]
	21	-162017+162016 Latch Bushing [1]
	22	-203037 Retaining Pin [1]
	23	-153018 Latch Retainer Spring [1]
	24	-163015 Latch Plunger [1]

Not Shown

[1] Coupling 908201-